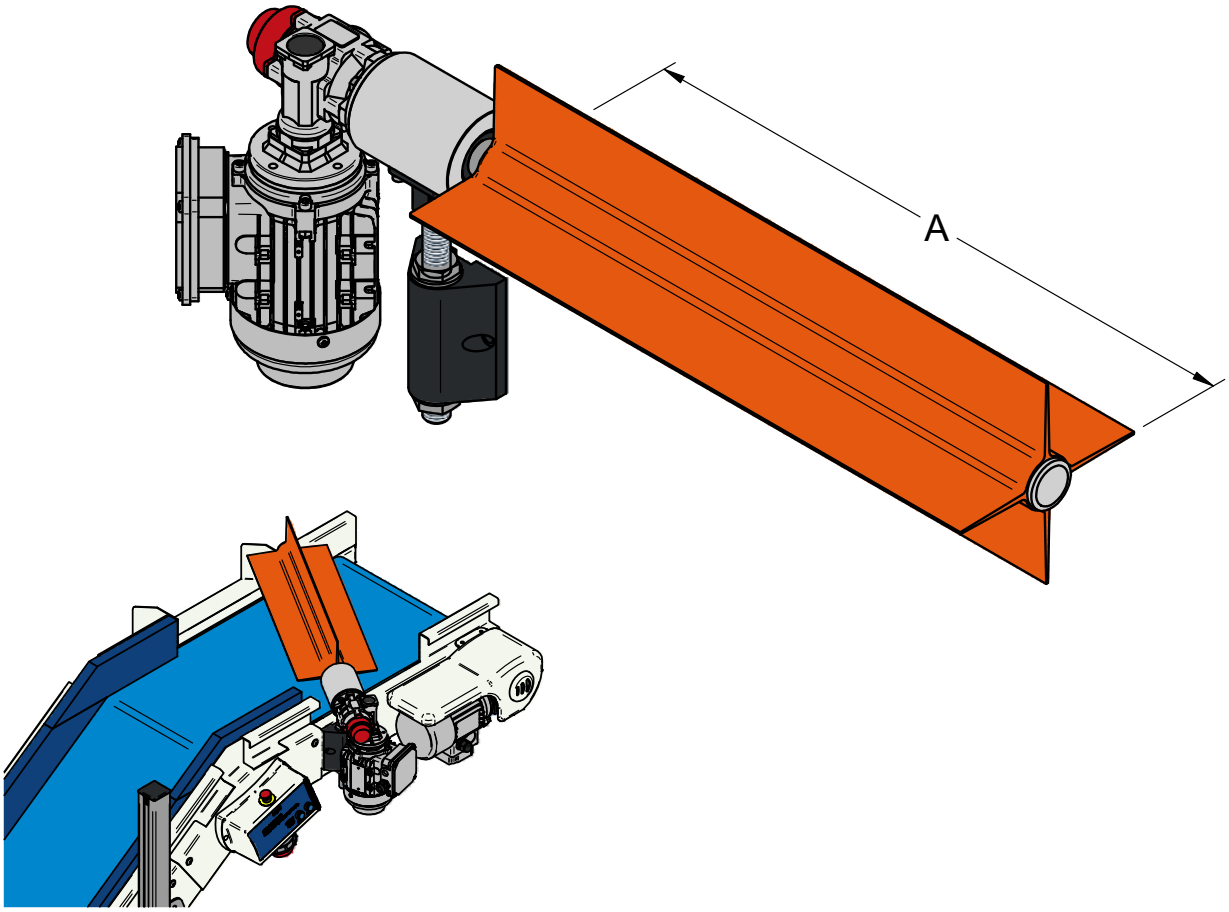
A

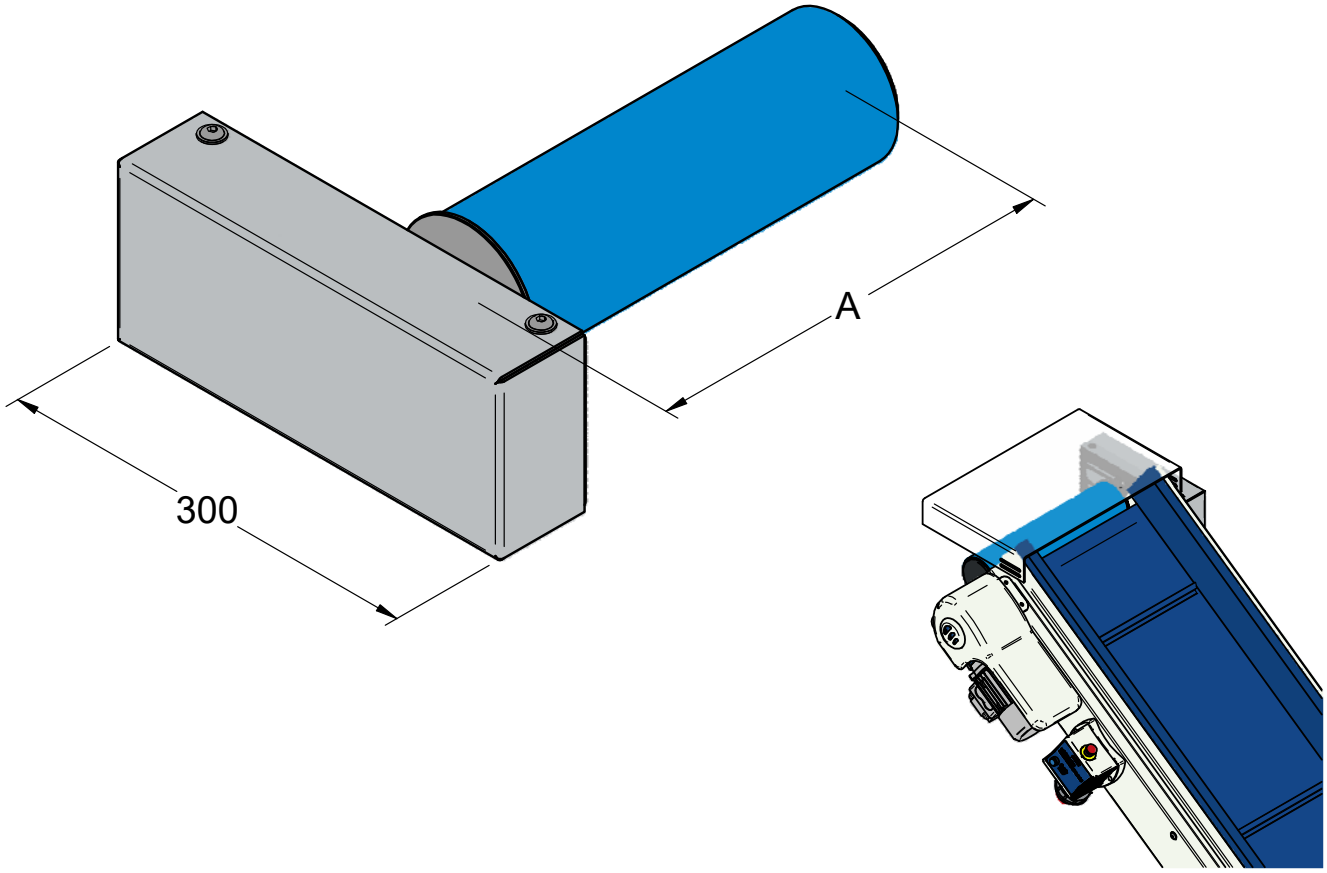
A
300