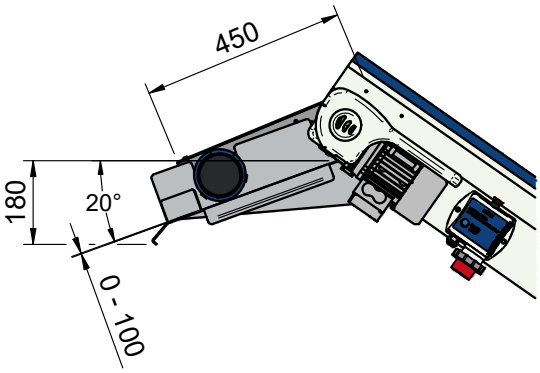
450
180
20°
0 - 100

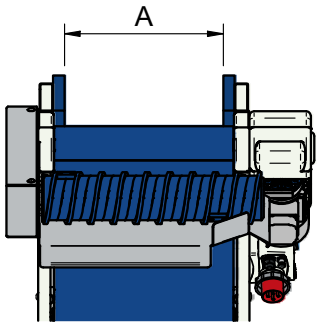
A

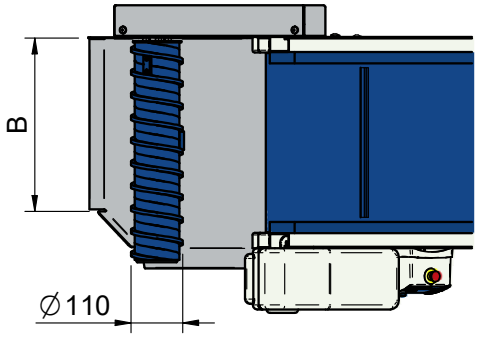
B
∅110

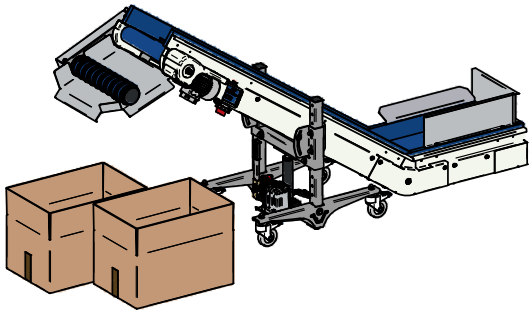

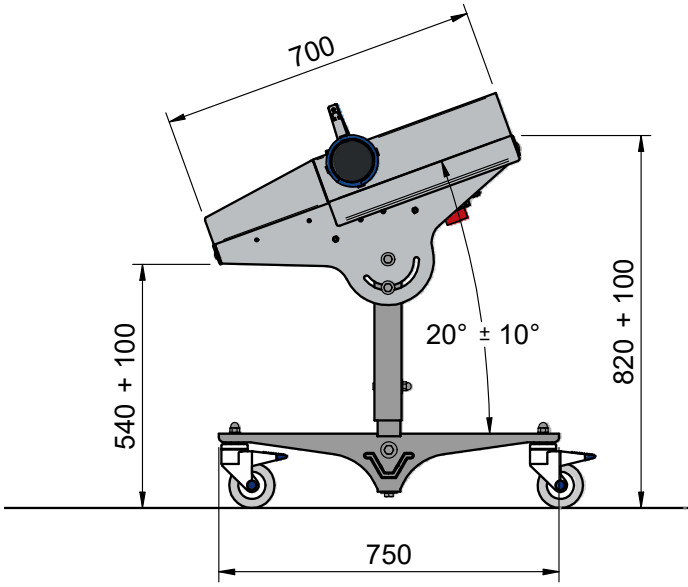
700
540 + 100
20° ± 10°
820 + 100
750

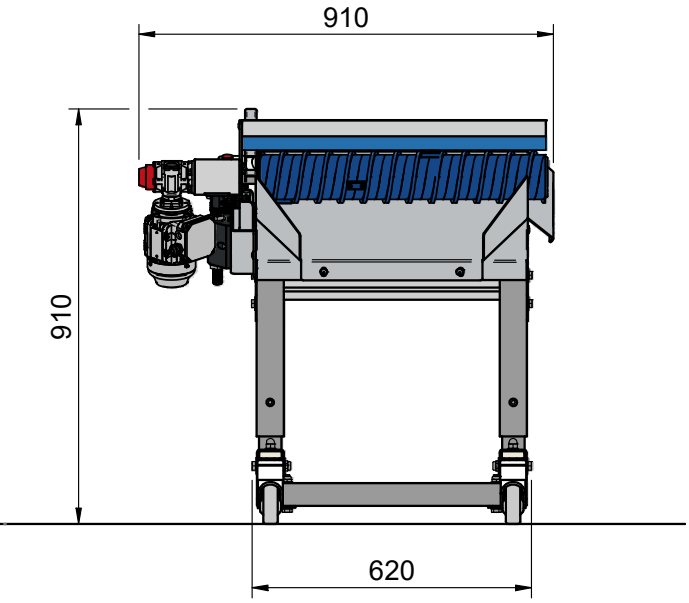
910
910
620

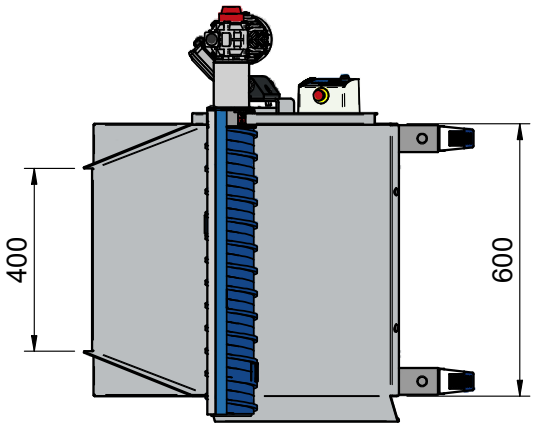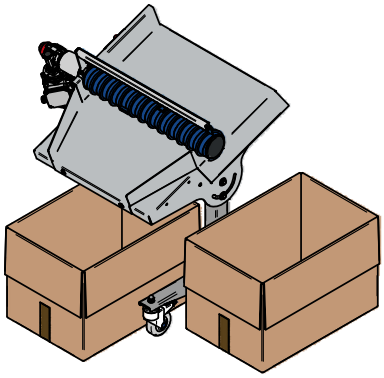
400
600